PART NUMBER

PFA100-*

DESCRIPTION

POWERALIGN CAMBER BOLT

FITTING INSTRUCTIONS

PowerAlign camber bolts allow up to +/- 1 degree of adjustment. They replace the original upper bolt on struts with 2 bolt fixings, one above the other, between the strut and knuckle.

Available in 5 sizes-

PFA100-12 = M12 x 60mm long, torque settings 55 lb-ft / 75 Nm

PFA100-14 = M14 x 70mm long, torque settings 70 lb-ft / 120 Nm

PFA100-15 = M15 x 71.5mm long, torque settings 70 lb-ft / 120 Nm

PFA100-16 = M16 x 75mm long, torque settings 90 lb-ft / 122 Nm

PFA100-17 = M17 x 75mm long, torque settings 90 lb-ft / 122 Nm

MAXIMUM TORQUE SETTINGS, DO NOT EXCEED.

Contents (parts per pack):

2 x PowerAlign camber bolts

2 x special tab washers

2 x lock nuts

Please read the complete fitting instructions and check package components before fitment.
These fitting instructions are to be used as a guide and in conjunction with workshop manual.
It is recommended that:
- all work to be carried out by a licensed technician;
- all safety precautions adhered to;
- wheel alignment to be checked and adjusted as required after any suspension work.
All fasteners must be tensioned to manufacturer's torque settings, unless new torque figures are suggested.

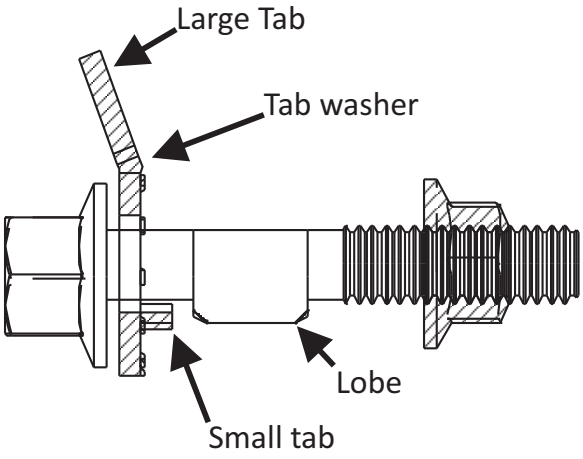

Fitting Instructions:

1. Check wheel alignment and note settings.
2. Gain access to the front strut to knuckle bolts, remove upper bolt and loosen lower bolt. Clean any dirt/rust from hole and both end faces.
3. The tab washer needs to be lined up so the small inner tab lines up with the lobe on the bolt. Fit the bolt with the large tab and lobe face towards the centre of the car this will give maximum camber adjustment. Fit the nut onto the camber bolt and tighten to the recommended torque (see above).
4. Tighten the lower bolt to the manufacturers torque setting.
5. Carry out a short road test to settle the suspension, re check the wheel alignment.
6. To adjust the camber loosen the camber bolt and the lower standard bolt, adjust as necessary by turning the bolt whilst holding the tab washer in either the negative or positive position.

   Tip. With the large tab on the washer pointing towards the centre of the car will give negative camber adjustment, pointing out from the car will give positive camber adjustment. Turning the bolt fine tunes the camber.

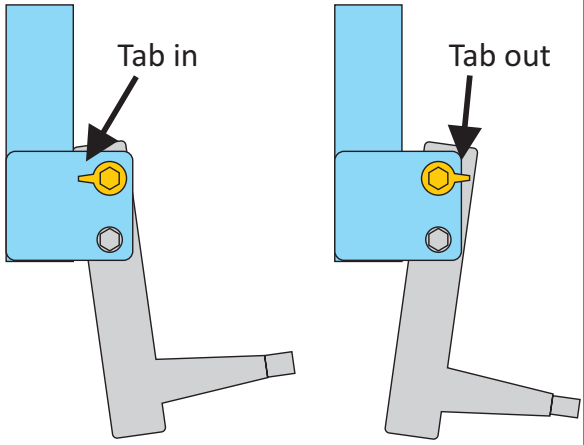

Negative camber

Positive camber

7. Tighten the PowerAlign camber bolts to the above recommended torque settings. Tighten the standard lower bolt to the manufacturers torque setting.